Ailunce HS4
User Manual

Contents

FUNCTIONS & FEATURES ----------01
WARNING ----------01
INSTALLATION ----------01
HOW TO USE YOUR RADIO ----------03
FUNCTION MENU SETUP ----------07
RESET FUNCTION (Resume Factory Default) ----------08
SPECIFICATIONS ----------09
CAUTION ----------10
Guarantee ----------12

FUNCTIONS & FEATURES

1. Large LCD panel which displays frequency and all kinds of information
2. DUAL-DIGITAL TUBE FOR CHANNEL DISPLAY
3. USE EL technology for backlight
4. PA、CW、AM、FM、USB、LSB mode
5. A、B、C、D、E、F , 6 banks in total, where 60 channels at least can be individually programmed.
6. Frequency Tuning Step can be 10HZ, 100HZ, 1KHZ or 10KHZ.
7. Multiple CLARIFIER Operating Modes
8. Flexible menu functions and PC programming software to meet varied customer demands
9. ECHO Function
10.SQ, ASQ Function (FM and AM mode only)
11.RF GAIN ADJUSTMENT
12.RF Power ADJUSTMENT
13.SCAN FUNCTION
14.RB FUNCTION
15.NB/ANL FUNCTION
16.DW DUAL-WATCH FUNCTION
17.BEEP VOICE PROMPT
18.+10KHZ Function
19.SWR、S/RF、DC Voltage display function
20.TOT function
21. HI-CUT FUNCTION
22.EMG CALL
23.SWR PROTECTION
24.POWER SUPPLIED VOLTAGE PROTECTION
25.Key-Lock Function
26.VOX function
27.CTCSS/DCS code
28.RX compander: noise blanker
29.Noise gate setting: mic noise adjustable
30.RX Noise Reduction
31.Compatible with “electronic” and “dynamic” MIC type

WARNING

To use the radio, please connect the antenna to the jack "B" on the back panel of the equipment first and then measure the SWR (Standing Wave Ratio) before transmitting (at this subject read the chapter nr.5/ page 3). A badly tuned antenna can destroy the final TX amplifier, these components are NOT covered under warranty.

INSTALLATION

1. WHERE AND HOW TO MOUNT YOUR RADIO

a) It is important to identify the proper place of the installation by considering "key criteria", such as easy access and congenial spaces with freedom of movement.
b) The radio must not compromise the comfort of either: the driver and the passengers.
c) Remember to provide cables in harmony with safety and prevention "standards". As well as guide their wiring in protected channels (eg: power supply, antenna, accessory wiring), so that they do not interfere in any way with the driving of vehicles.
d) To install your equipment, use the bracket (1) and the self-tapping screws [2] provided (drilling diameter 5 mm). Be careful not to damage the vehicle's electrical system when drilling the dashboard.
e) Do not forget to insert the rubber joints [3] between the radio and its bracket as they have a cushioning effect that allows a delicate orientation and tightening of the device.
f) Choose where to place the microphone holder and remember that the microphone cable must extend to the driver without interfering with the vehicle's controls.

2. ANTENNA INSTALLATION

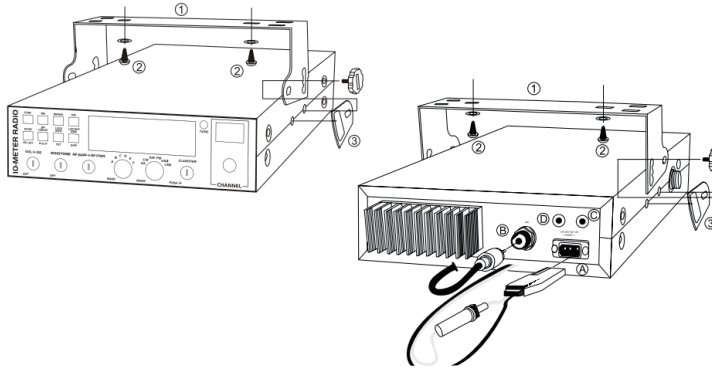

a) Antenna selection:
For the best signal radiation, a well-calibrated antenna length is very important, on the other hand, there are other factors to be considered: the size of the vehicle and its usual speed.
b) Mobile antenna:
-Must be fixed to the vehicle where there is a maximum of metallic surface (ground plane) away from windscreen mountings.
-There are two types of antennas: Pre-Regulated Antenna which should be used on a good ground plane (e.g. car roof or lid of the boot), and Adjustable Antenna which offers a much wider frequency range and can be used over a smaller ground plane. For an antenna that must be fixed by drilling, you will need a good contact between the antenna and the ground plane. To obtain this, you should lightly scratch the surface where the screw and tightening star are to be placed.
-Be careful not to pinch or flatten the coaxial cable (as this runs the risk of breakdown and/or short-circuiting).
-Connect the antenna to location (B).
c) Fixed antenna:
A fixed antenna should be installed in a predominant area, possibly emerging over the entire surrounding topography, including the canopies of trees. Normally the antenna is raised and fixed on the top of a mast. In some areas, especially urban ones, it may be necessary to observe the regulations in force in the specific region. To avoid unnecessary inconvenience, it is advisable to check this matter with the authorities entrusted.

3. POWER CONNECTION ON THE CAR

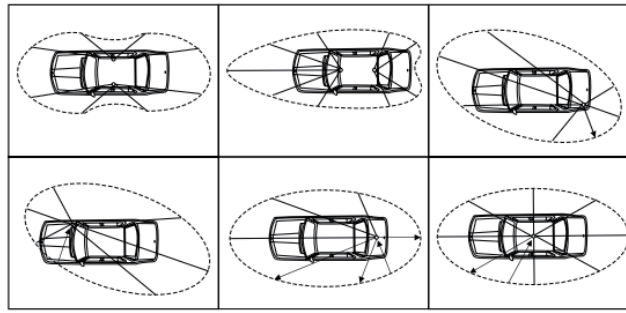

Your radio is protected against an inversion of polarities. However, before switching it on, you are requested to check all the connections. Your equipment must be supplied with a voltage of 12 volts DC(Direct Current). Today, most cars and trucks are negative earth. You can check this by making sure that the negative terminal of the battery is connected either to the engine block or to the chassis. If this is not the case, you should consult your dealer.
WARNING: trucks generally have two batteries to supply a voltage of 24 volts, in which case it will be necessary to insert a 24/12-volt inverter into the electrical circuit. The following connection steps should be carried out with the power cable disconnected from the set.

a) Check whether the battery is 12 volts.
b) Locate the positive and negative terminals of the battery (+ is red and – is black). Should it be necessary to lengthen the power cable, please use the same or a superior type of cable.
c) It is necessary to connect your radio to a permanent (+) and (-). We advise you to connect the power cable directly to the battery (as the connection of the cable to the wiring of the car radio or other parts of the electrical circuit may, in some cases, increase the possibilities of interference).
d) Connect the red wire (+) to the positive terminal of the battery and the black (-) wire to the negative terminal of the battery.
e) Connect the power cable to your radio.
WARNING: Never replace the original fuse (10A) by one of a different value.

4. BASIC OPERATIONS TO BE CARRIED OUT BEFORE USING

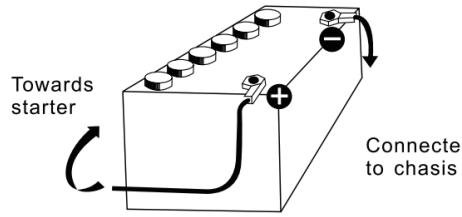

YOUR SET FOR THE FIRST TIME (without transmitting or using the <<Push-To-Talk>> switch on the microphone)
a) Connect the microphone
b) Check the antenna connections
c) Turn the set on by rotating the volume knob clockwise
d) Rotate the squelch knob to minimum
e) Adjust the volume to a comfortable level
f) Tune to channel 20 at the D bank by using either the UP or DN key on the microphone or the rotary knob.

5. ADJUSTMENT OF SWR (standing wave ratio)
WARNING: This process must be carried out when you use your radio for the first time (and whenever you re-position your antenna). The adjustment must be carried out in an obstacle-free area.
Adjustment with a built-in SWR meter or external SWR meter
a) To connect the SWR meter Connect the SWR meter between the radio and the antenna as close as possible to the radio (use a maximum of 40cm cable).
b) To adjust the SWR meter
-Set the radio to channel 20 at the D bank in FM.
-Slide the switch on the SWR meter to position CAL or FWD.
-Press the <<Push-To-Talk>> switch on the microphone to transmit.
-Adjust the index needle over ▼ sign by rotating the calibration knob.
-Change the switch to position SWR (reading of the SWR level). The reading on the meter should be as near as possible to 1. If this is not the case, re-adjust your antenna to obtain a reading as close as possible to 1. (An SWR reading between 1 and 1.8 is acceptable).
-It will be necessary to re-calibrate the SWR meter after each adjustment of the antenna.

6. HOW TO USE AN EXTERNAL SWR METER
-Set to channel 20 on D bank in FM.
-Press the <<push-to-talk>> button on the microphone to transmit.
-At the moment, LCD would display SWR value which should be as close as possible to 1. If this is not the case, re-adjust your antenna to obtain a SWR value as close as possible to 1 (an SWR reading between 1 and 1.8 is acceptable).

HOW TO USE YOUR RADIO

<LCD Display>

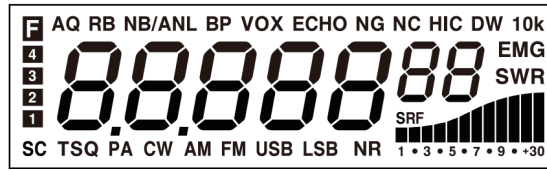

7 digits	Display frequency and any other information.
Indicating bars	Indicate RX, RSSI, PA, PWR, SWR.
The first decimal point	Appears when the current channel is edited with SCAN DEL.
F	Appears after pressing the FUNC key.
AQ	Appears when the ASQ function is started (only for AM/FM).
RB	Appears when the Roger beep function is started (enabled).
NB/ANL	Appears when the NB/ANL function is started (enabled).
BP	Appears when the BP function is started (enabled).
ECHO	Appears when the ECHO function is started (enabled).
VOX	Appears when the VOX function is started.
NG	Appears when the TX noise gate is started.
NC	Appears when the RX noise compander is started.
HI-CUT	Appears when the HI—CUT function is started.
DW	Appears when the DW function is started.
10K	Appears when the +10KHZ function is started.
EMG	Appears when the EMG channel is used.
SWR	Appears when the SWR is used.
SRF	Appears when the S/RF is used.
SC	Appears when the SCAN is used.
TSQ	Appears when the CTCSS/DCS code is used.
NR	Appears when the RX noise reduction is turned on.
PA、CW、AM、FM、USB、LSB	Indicate different operating modes. 1. Appears when the CLARIFIER function is FINE operation. 2. Appears when the CLARIFIER FUNCTION is a COARSE operation or RT operation. 3. Appears when the CLARIFIER FUNCTION is transmitting frequency regulated.

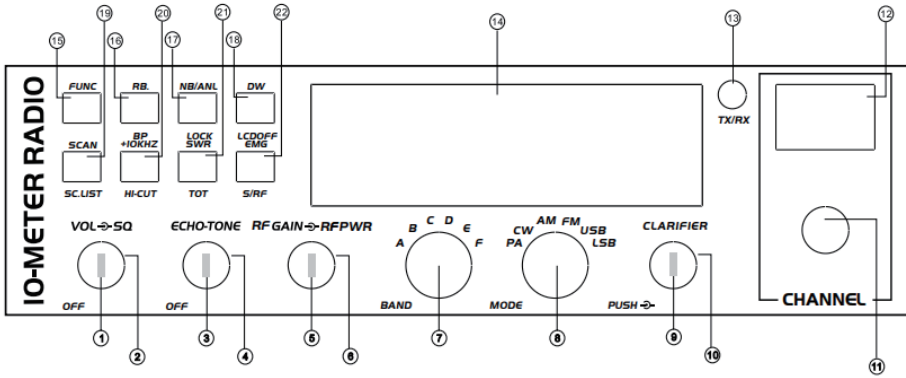

1.OFF/ON/VOLUME (Inner Dual Concentric)	Rotate clockwise to switch on the radio and set the desired volume level. Under normal operating state, the VOLUME control is used to adjust the output volume obtained either by the transceiver speaker, or the external speaker, or the external PA speaker, if used.
2.SQUELCH (Outer Dual Concentric)	This control is used to cut off or eliminate receiver background noise in the absence of an incoming signal. For maximum receiver sensitivity, it is desired that the control be adjusted only to the point where the receiver background noise or ambient background noise is eliminated. Rotate fully anticlockwise then slowly clockwise until the receiver noise disappears. Any signal to be received must now be slightly stronger than the average received noise. Further clockwise rotation will increase the threshold level that a signal must overcome to be heard. Only strong signals will be heard at a maximum clockwise setting.
3. ECHO (Inner Dual Concentric)	This switch is used to control echo effect.
4. TONE (Outer Dual Concentric)	This switch is used to control intervals of echo sound.
5. RF GAIN (Inner Dual Concentric)	This switch is for adjusting sensitivity during reception. For long distance communications, RF GAIN should be set to maximum. RF GAIN can be reduced to avoid distortion when your correspondent is close by and when he does not have RF POWER. The normal setting of this function is on maximum (fully clockwise).
6.RF POWER (Outer Dual Concentric)	Adjustment of the output power is for AM and FM mode only. Reducing the power is allowed when communicating with a person who has no RF GAIN. The normal position of this function is set to maximum, fully clockwise.
7. BAND SELECTOR	Rotate this switch to select A, B, C, D, E, and F bands of operation.
8.MODE(PA/CW/AM/FM/USB/LSB)	This switch allows selecting the modulation mode PA, CW, AM, FM, LSB, or USB. Your modulation mode has to correspond with one of your correspondents. The mode selector changes the mode of operation of both the transmitter and receiver simultaneously. Frequency Modulation/FM: for nearby communications on a flat open field. Amplitude Modulation/AM: Communication on a field with relief and obstacles in middle distance (the most used). Upper and Lower Side Band/USB-LSB: Used for long distance communications (according to the propagation conditions).
9. CLARIFIER	This is the frequency tuning knob which can be set as different modes (refer to CLA Specifications in Functions Menu for more details).
10.PUSH	This is the PUSH Key which can be set as different modes (refer to PSH specifications under Functions Menu for more details).
11.CHANNEL SELECTOR	Rotate this switch to select any desired channel from forty citizens band channels. The selected channel appears on the LED directly above the channel selector knob.
12.CHANNEL INDICATOR	The numbered LED indicates the selected channel to operate on.
13.RECEIVER/TRANSMIT INDICATOR	When it is receiving, the LED will be green. The LED will be red when it is transmitting.
14.LCD DISPLAY	Display frequency, all kinds of information, and icons.
15.FUNC	This is the functional key. Press and hold this key for 2 seconds to enter Functions Menu Setup (refer to Functions Menu for more details). Press the FUNC key and another individual key to realize the second function silk-screened under the button. For example, press the FUNC key followed by pressing the RB key to realize the BP function. Press the FUNC key followed by DW to realize the LCD OFF function. Details operations are as bellows: Press the FUNC key, "FUNC" icon will appear on the LCD. Release the FUNC key, and then press other keys to realize the second function silk-screened under the button. "FUNC+ Keypad name" will be used in the following operating instructions.

16.ROGER BEEP OR BEEP FUNCTION	(1) RB Press the "RB" key to enable the "ROGER BEEP" function with the "RB" icon appearing on the LCD. Press the key repeatedly to switch on/off the function. When the RB function is enabled, the radio will automatically transmit the audio signal at the end of your transmission. The listener can note easily that your transmission is over through the signal. (2) FUNC+RB Press the FUNC+RB key to realize the BP Function. It is a prompting function with the "BP" icon appearing on the LCD. The speaker would emit a BEEP for prompting when pressing any key. Press the FUNC+RB key repeatedly to switch on/off the function.
17. NB/ANL or LOCK	(1) Press the NB/ANL key to enable the NB/ANL function with the "NB/ANL" icon appearing on the LCD. Press the key repeatedly to switch on/ off the function. Noise Blanker/Automatic Noise Limiter. These filters allow reducing background noises and some reception interference. (2) FUNC+NB/ANL Press the FUNC+NB/ANL key to realize the Keyboard Lock function. When this function is enabled, all keys are invalid except PTT, BAND SWITCH, and MODE SWITCH. When pressing any key except PTT, BAND SWITCH, and MODE SWITCH, the LOCK icon will display on the LCD. These situations indicate that the keyboard has been locked. Press the FUNC+NB/ANL key repeatedly to switch on/off the function.
18.DW or LCD OFF	(1) The DW (dual watch) function allows automatic alternate monitoring of two channels. Refer to the following procedures to enable this function. To enable the DW function, firstly rotate the SQ control clockwise until the background noise is cut out. Select the first channel to be monitored by using the CHANNEL SELECTOR knob or the channel selector keys on the microphone. Press the DW key and the DW icon will flash on the LCD display. Secondly, follow the above procedures to select the second channel to be monitored. Finally, press the DW key again and the two monitoring channels will be alternately indicated on the LCD. Radio will automatically start monitoring (scanning) the two channels. When a signal is detected on one of the channels, scanning stops and it is possible to listen to the communications on that channel. Press PTT to transmit on this channel. If there is no transmission or detected signal on that channel within 5 seconds (time to resume scanning can be programmed by PC software), the radio will resume scanning. When the DW function is enabled, the DW icon appears on the LCD. To exit the DW function, press the DW key or the PTT key. The scan Type above is the SQ mode under SCA Selection in the Function Menu. If TI mode is selected and the valid signal is detected, the radio will still start scanning when it is time to resume scanning, whether there is a signal or not in the current channel. FUNC+DW When this function is enabled, the LCD display will be switched OFF (LCD OFF). Repeat this operation to switch ON/ OFF the function.
19.SCAN OR Scan.list	(1) SCAN Automatic Scanning of busy channels. Press the SCAN key to enable the SCAN function. Before enabling the SCAN function, firstly rotate the SQ control clockwise till the background noise is cut out. Then press the SCAN key, the radio will automatically scan all channels continuously in the scan list and the SC icon will appear on the LCD. When a signal is detected on a channel, scanning stops on this channel. You can receive the call, and can transmit it on this channel by pressing the PTT key. If there is no transmission or detected signal on that channel within 5 seconds (time to resume scanning can be programmed by PC software), the radio will start scanning again. To exit the SCAN function, press the SCAN key or the PTT key. The Scan Type above is the SQ mode under SCA Selection in the Function Menu. If TI mode is selected and the valid signal is detected, the radio will still start scanning when it is time to resume scanning, whether there is a signal or not in the current channel. (2) FUNC+SCAN SC. LIST (Scan ADD or Delete). Press the FUNC+SCAN key to delete the current channel from the scan list. The first digit on the LCD would display. When Scan function is enabled, the radio will skip the deleted channel. Repeat this operation to Add or Delete channels from the scan list.
20. +10KHZ or HI-CUT	(1) +10KHZ Press this key to shift frequency up by 10khz. When pressing this key, 10KHZ appears on the LCD, and frequency of channels is shifted up by 10 KHZ. Repeat this operation to switch ON/OFF this function. (2) FUNC+ +10KHZ Press the FUNC+10KHZ key to realize the HI-CUT function. Once this function is enabled, the radio would cut out high frequency interference. Its use depends on reception conditions. When this function is enabled, "HI-CUT" will appear on the LCD. Repeat this operation to switch ON/OFF the function.
21.SWR OR TOT	(1) SWR When pressing this key, the “SWR” icon will appear on the LCD. When transmitting, SRF bars indicate SWR value other than PA or PWR value. One bar displayed on the LCD indicates that the SWR value is 1.0. Each additional bar indicates every 0.1 added value. Repeat this operation to switch ON/OFF the function. (2) FUNC+ SWR When pressing this key, TOT ON or TOT OFF will display on the LCD for 2 seconds. Repeat this operation to switch ON/OFF the function. When ON appears on the LCD, users can press the PTT to transmit. Then, the radio will time the transmitting duration. Once the duration is beyond the set TOT time (programmable), the radio will emits a voice prompt to stop transmitting and back to the receiving state automatically. This function aims to protect the radio against power tube damage from super heating caused by long transmission.

22. EMG OR S/RF	(1) EMG realizes the Emergency Channel Call. When an emergent situation happens, the radio will switch to the channel set in advance to communicate immediately. Then the "EMG" icon will display on the LCD. Press the EMG key again to return to the previous channel. (2) FUNC + S/RF S/RF is the switch of TX's or RX's S/RS indicating bar. When this function is enabled, the "SRF" icon will display on the LCD. Repeat this operation to switch ON/OFF the function.

<Rear Panel>

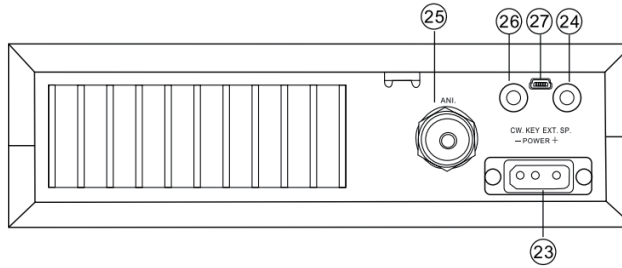

23. POWER	Accept13.8V DC power cable with built-in fuse (10 Amp) to be connected.
24. EXT SP or PA SP	EXT SP Accepts a 4-to-8-ohm, 4-watt external speaker to be connected. When an external speaker is connected to this jack, the built-in speaker is automatically disconnected. PA SP It is used to connect a PA speaker. Before operating the PA, you must first connect a PA speaker to this jack.
25.ATTENNA	Accept a 50-ohm coaxial cable with a type of PL-259 plug to be connected.
26.CW KEY	This jack is for Morse code operation; To operate, connect a CW key to this jack and place the MODE switch in the CW position (LCD display icon "CW").
27.CW KEY	*PC connection for software programming.

<PRESS—TO—TALK—MICROPHONE>

The receiver and transmitter are controlled by the Press-To-Talk switch on the microphone. Press the switch to transmit and then release it to receive. When transmitting, hold the microphone two inches from the mouth and speak clearly in a normal “voice”. The radios come complete with a low-impedance (150 ohm) dynamic microphone.

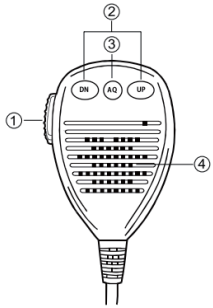

1. PTT	Transmitting key, press to speak, and release to receive a message.
2. UP/DN	These keys allow increasing or decreasing a channel number.
3. AQ	(1) When the radio is receiving a call, press this key to enable the ASQ (Automatic Squelch Control) function. Then, "AQ" will appear on the LCD. Press this key repeatedly to switch on/off the function. (2) When the radio is receiving a call, press and hold this key for over 2 seconds to enable the signal monitoring function. Now, whether the radio receive a signal or not, the radio detects the current channel to check whether the current channel has a weak signal. Release the AQ key to exit this function. (3) Pressing the PTT and AQ key at the same time, the radio emits a single tone. This tone is to help and remind two sides of communication to adjust the frequency. The frequency of this tone is adjustable. (4) ASQ (Automatic Squelch Control) ASQ control setting. It has the same function as the AQ button on the microphone. This jack is for Morse code operation; To operate, connect a CW key to this jack and place the MODE switch in the CW position (LCD display icon "CW")
4. MICROPHONE	The radios come complete with a low-impedance (150 ohm) dynamic microphone.

FUNCTION MENU SETUP

The initial functions and parameters can be changed via the following settings and operations. Please read the following instructions before making any desired amendments.
To enter the Function Menu: under ON state, press and hold the FUNC key for more than 2 seconds, and then release the FUNC key to enter the Function Menu Setup. Under this condition, press the FUNC key to select different functions menu, and CHANNEL SELECTOR Switches to change the data of the Function Menu.

(1) ICG	ICG 41	This menu refers to MIC GAIN function. Users can set the value by software. The higher value goes to higher sensitivity. 64 grades in total (OFF,0-63) Default: 41
(2) DIM	dim 3	This menu controls the backlight brightness. Level 1, 2, 3, Default: 3
(3) UOL	uoL oFF	This menu controls the VOX sensitivity from level OFF to 9. Default: OFF
(4) UOT	uot 04	This menu controls the VOX delay time from level 1 to 9. Default: 04
(5) RCDT	rCdt oF	This menu refers to RX CTCSS and DCS code setting. Default: OFF
(6) TCDT	tCdt oF	This menu refers to TX CTCSS and DCS code setting. Default: OFF
(7) NC	nC oFF	This menu refers to RX noise compander setting. Default: OFF
(8) NG	oG oFF	This menu refers to TX noise gate setting. Default: OFF
(9) NR	rnr oFF	This menu refers to RX noise reduction setting 6 grades in total (OFF, 1-5) Default: OFF
(11) ICP	ICP dy	This menu refers to microphone type setting. EL: electronic type, DY: dynamic type Default: DY
(12) NOG	nOG oFF	It refers to TX MON function. Users can set the volume and grade of the TX MON by software. The higher grade goes to louder TX MON. 64 grades in total (OFF,0-63) Default: OFF
(13) CSU	CSu 31	This menu is to adjust the side voice of CW SIDE VOL CW. 64 grades in total. Default: 31
(14) BEU	bEu 31	This menu is to set the volume of prompt voice. 64 grades in total (OFF,0-63). Default: 31
(15) STP	StP 10	This menu is to set the tuning step when adjusting frequency by the CLARIFIER knob Options: 10Hz 、100Hz 、1KHz 、10KHz Default: 10Hz
(16) CLA	CLA rt	This menu is to set functions turned by the CLARIFIER knob. Options are as follows: **FIN:** Fine regulation. When this option is selected, users can fine tune the receiving frequency by rotating the CLARIFIER knob. In the tuning process, the transmitting frequency cannot be regulated by the knob and the “1” icon will appear on the LCD. **RT:** When this option is selected, users can regulate the frequency of both transmitting and receiving. In the tuning process, the “2” icon will appear on the LCD. **T:** When this option is selected, users can only regulate the transmitting frequency. In the tuning process, the “3” icon will appear on the LCD. Default: RT
(17) PUS	PUS StP	This menu is to set functions realized via the PUSH knob. Options are as follows: **COA:** When this option is selected, press the PUSH and turn the CLARIFIER knob to realize the COARSE function. When pressing this key, the "2" icon will appear on the far left of the LCD. Under this condition, rotate the CLARIFIER knob to change frequency of both transmitting and receiving. **T:** When this option is selected, press the PUSH and turn the CLARIFIER knob to change transmitting frequency. When pressing this key, the “3" icon will display on the far left of the LCD. Under this condition, rotate the CLARIFIER knob to change the transmitting frequency only. **STP:** When this option is selected, the PUSH function will change Frequency Tuning Step of the CLARIFIER knob. Press this key, then the corresponding frequency bit will blink. Default: STP
(18) ASQ	ASQ oFF	ASQ control setting. It has the same function as the AQ button on the microphone. Default: OFF
(19) TOT	tot 180	This menu is to set transmitting TOT time. When pressing the PTT key at a single time longer than the due time set up in advance, the radio will stop transmitting automatically and the loudspeaker will emit a voice prompt till the PTT key is released. Then, the radio can transmit again. Options: 30-600s Step: 30s Default: 180s

(20) SC	SC SQ	This menu is to set Scan Type. Options are as follows: **SQ:** When SQ is selected, the scan will stop when a valid signal is detected. The radio will resume scanning after the signal disappears for 5s. **TI:** When TI is selected, the scan will stop when a valid signal is detected. The radio will resume scanning 5 seconds later, whether the signal disappears or not. Default: SQ
(21) TSR	tSr on	This menu is to choose whether to enable the Transmitting SWR Protection function or not. ON: When ON is selected, the radio will detect the SWR of the antenna. Once the SWR is beyond the SWR set in advance, the radio will prohibit transmitting automatically and the loudspeaker will emit a voice prompt. Then, the “HI S” icon will display on the LCD to remind you that the antenna SWR is too high or antenna does not connect well. OFF: When OFF is selected, SWR Protection function is disabled. NOTE: To protect the radio from long transmission under high SWR, the radio will automatically start SWR Protection once the SWR Value is higher than 20:1. Default: ON (SWR=<10:1)
(22) TDC	tdC on	This menu is to choose whether to enable the Power supplied Voltage Protection function. ON: When ON is selected, the radio will detect the supplied voltage. Once the voltage surpasses the voltage set up in advance, the radio would display “DC LO” or “DC HI” to remind you that the voltage is not in a normal state. Meanwhile, the radio will prohibit transmitting and emit a beep prompt. OFF: When OFF is selected, the Power Supplying Voltage is disabled. Default: ON (DC 10.5V-16V)
(23) TLD	tLd tF	This menu is to set the content displayed on the LCD when transmitting. **TF:** When TF is selected, LCD will display transmitting frequency when transmitting. SR: When SR is selected, LCD will display SWR value of the antenna when transmitting, for example: "1.2" on the LCD. **BAT:** When BAT is selected, LCD will display Supplied Voltage when transmitting, for example: "13.8DC" on the LCD. **TOT:** When TOT is selected, LCD will display TOT’s remaining time when transmitting. And TOT would count down till the remaining time is 0, for example: "170" displayed on the LCD display. Default: TF
(24) RBF	rbF 1050	This menu is to select the frequency of Roger Beep. The frequency range is 300KHz-3KHz. The shift step is 10Hz. Default: 1050Hz
(25) RBT	rbt 500	This menu is to select Roger Beep Holding Time from 50ms—1000ms. The shift step is 50ms. Default: 500m
(26) CFR	CFr 1050	This menu is to select CW Side Tone Frequency from 300Hz-3KHz, the shift step is 10Hz. Default: 1050Hz
(27) TON	ton 1050	This menu is to select Transmitting Single-Tone Frequency from 300Hz-3KHz. The shift step is 10Hz. Default: 1050Hz
(28) AGC	AGC FA	This menu is to select the S-Meter response speed. FA:Fast speed, SL: Slow speed. Default: FA

RESET FUNCTION (Resume Factory Default)

This Radio offers the RESET FUNCTION to prevent and solve accidental upgrading, as well as provides a solution for customers who changed or activated unconsciously some unwanted function: resuming the original “factory setting” is easy and instantly.
How to Operate:
Method 1 (Background reset)
Step 1: Power off the radio.
Step 2: Press and hold the FUNC and SCAN keys at the same time, followed by powering on the radio.
Step 3: Release the two keys when the LCD displays "RES". All former settings would be replaced by Factory Default value when the LCD displays "REND”.

Method 2 (Background+Channel reset)
Step 1: Power off the radio.
Step 2: Press and hold the FUNC and EMG keys at the same time, followed by powering on the radio.
Step 3: Release the two keys when the LCD displays "1BAND", Press and hold the FUNC key again. All former settings would be replaced by Factory Default value when the LCD displays "REND”.

WARNING: All former settings would be replaced by Factory Default value after operating the RESET FUNCTION.

SPECIFICATIONS

General	
Frequency Range	28.000MHz-29.700MHz
Frequency Band	A/B/C/D/E/F
Channel	60 channels (programmable)
Frequency Control	Phase-Locked-Loop Synthesizer
Frequency Step	10Hz 100Hz 1KHz 10KHz
Frequency Tolerance	0.005%
Frequency Stability	0.001%
Temperature Range	-30℃to +50℃
Microphone	Plug-in dynamic: with push-to-talk /UP/DN/ ASQ switch and coiled cord
Input Voltage	DC 13.8V normal, 15.9V max; 11.7V min Transmit: AM full mod 6A Receiver: Squelched 0.8A SSB 30W PEP output 9A
Size	28*25*6CM
Weight	1.5KG
Antenna Connector	UHF, SO239
TRANSMITTER	
Power Output	AM/CW: 1-12W(adjustable) FM: 1-40W(adjustable) USB/LSB: 1-35W(adjustable)
Modulation	AM FM
Inter-modulation Distortion	SSB: 3rd order, more than -25dB; 5th order, more than -35dB
SSB Carrier Suppression	55dB
Unwanted Sideband	50dB
Frequency Response	AM and FM: 450 to 2500Hz
Output impedance	50ohms, unbalanced
Sensitivity	SSB: 0.25µV for 10dB(S+N)/N at greater than 1/2-watt of audio output. AM:1.0µV for 10 dB(S+N)/N at greater than 1/2watt of audio output. FM: 1.0 µV for 20 dB (S+N)/N at greater than 1/2 watt of audio output.
Selectivity	AM/FM: 6dB@3KHz,50dB @9KHz SSB: 6 dB@2.1KHz,60dB @3.3KHz
Image Rejection	More than 65dB
IF Frequency	AM/FM: 10.695 MHz 1st IF, 455 kHz 2nd IF SSB: 10.695 MHz
Adjacent-Channel	60dB AM/FM &70 dB SSB
RECEIVER	
RF Gain Control	45 dB adjustable for optimum signal reception
Automatic Gain Control (AGC)	Less than 10 dB change in audio output for inputs from 10 to 100,000 microvolt.
Squelch	Adjustable; threshold less than 0.5 µV. Automatic Squelch Control(only AM/FM) 0.5 µV
ANL	Switchable
Noise Blanker	RF type, effective on AM/FM and SSB
Audio Output Power	3 watts into 8 ohms
Frequency Response	300 to 2800 Hz
Built-in Speaker	8 ohms, round.
External Speaker (Not Supplied)	8 ohms; disables internal speaker when connected.

CAUTION

User' instructions should accompany the device when transferred to other users.

Unauthorized modification and adjustment
Changes or modifications not expressly approved by the party responsible for compliance may void the user's authority granted by the local government radio management departments to operate this radio and should not be made. To comply with the corresponding requirements, transmitter adjustments should be made only by or under the supervision of a person certified as technically qualified to perform transmitter maintenance and repairs in the private land mobile and fixed services as certified by an organization representative of the user of those services. Replacement of any transmitter component (crystal, semiconductor, etc.) not authorized by the local government radio management departments equipment authorization for this radio could violate the rules.

Radio License
Governments keep the radios in classification. Two-way radios are only operated on authorized radio frequencies that are regulated by the local radio regulatory authorities (such as FCC, ISED, OFCOM, ANFR, BFTK, ComReg, Bundesnetzagentur, and so on.). For detailed classification and the use of your two-way radios, please contact the local government radio management departments. Use of this radio outside the country where it was intended to be distributed is subject to government regulations and may be prohibited.
This radio equipment contains frequency bands that are subject to licensing procedures before this radio system is allowed to be operated. Please make sure you have a valid radio license or radio operator permit before use.

FCC
This device complies with part 15 of the FCC Rules. Operation is subject to the condition that this device does not cause harmful interference. (Licensed radios are applicable)

Note: This equipment has been tested and found to comply with the limits for a Class B digital device. These limits are designed to provide reasonable protection against harmful interference in a residential installation. This equipment generates, uses and can radiate radio frequency energy and, if not installed and used in accordance with the instructions, may cause harmful interference to radio communications. However, there is no guarantee that interference will not occur in a particular installation. If this equipment does cause harmful interference to radio or television reception, which can be determined by turning the equipment off and on, the user is encouraged to try to correct the interference by one or more of the following measures:
—Reorient or relocate the receiving antenna.
—Increase the separation between the equipment and receiver.
—Connect the equipment into an outlet on a circuit different from that to which the receiver is connected.
—Consult the dealer or an experienced radio/TV technician for help.

Disposal
The crossed-out wheeled-bin symbol on your product, literature, or packaging reminds you that all electrical and electronic products, batteries, or accumulators must be taken to designated collection locations at the end of their working life. Do not dispose of these products as unsorted municipal waste. Dispose of them according to the laws and rules in your area.

RF Safety
This two-way radio uses electromagnetic energy in the radio frequency (RF) spectrum to provide communications between two or more users over a distance. RF energy, which when used improperly, can cause biological damage. Please refer to the following websites for more information on what RF energy exposure is and how to control your exposure to assure compliance with established RF exposure limits: http://www.who.int/en/
Transmit no more than the rated duty factor 50% of the time. Transmitting necessary information or less, is important because the radio generates measurable RF energy exposure only when transmitting in terms of measuring for standards compliance. For users who wish to further reduce their exposure, some effective measures to reduce RF exposure include:
• Reduce the amount of time spent using your wireless device.
• Use a speakerphone, earpiece, headset, or other hands-free accessory to reduce proximity to the head (and thus head exposure). While wired earpieces may conduct some energy to the head and wireless earpieces also emit a small amount of RF energy, both wired and wireless earpieces remove the greatest source of RF energy (handheld device) from proximity to the head and thus can greatly reduce total exposure to the head.
• Increase the distance between wireless devices and your body.
• This radio is designed for and classified as "Occupational/Controlled Use Only". Occupational/Controlled environments are defined as locations where there is exposure that may be incurred by people who are aware of the potential of exposure, for example, as a result of employment or occupation. It means a radio must be used only by individuals aware of the hazards, and the ways to minimize such hazards; Not intended for use in a General population/uncontrolled environment.

Electromagnetic Interference/Compatibility
Nearly every electronic device is susceptible to electromagnetic interference (EMI) if inadequately shielded, designed, or otherwise configured for electromagnetic compatibility.
During transmissions, your radio generates RF energy that can possibly cause interference with other devices or systems. To avoid such interference, turn off the radio in areas where signs are posted to do so, such as hospitals or healthcare facilities.
• Persons with pacemakers, implantable cardioverter defibrillators (ICDs) or other active implantable medical devices should
• Consult with their physicians regarding the potential risk of interference from radio frequency transmitters, such as portable radios (poorly shielded medical devices may be more susceptible to interference).
• Turn the radio OFF immediately if there is any reason to suspect that interference is taking place.
• Do not carry the radio in a chest pocket or near the implantation site, and carry or use the radio on the opposite side of the body from the implantable device to minimize the potential for interference. Hearing Aids: Some digital wireless radios may interfere with some hearing aids. In the event of such interference, you may want to consult your hearing aid manufacturer to discuss alternatives.
• Other Medical Devices: If you use any other personal medical device, consult the manufacturer of your device to determine if it is adequately shielded from RF energy. Your physician may be able to assist you in obtaining this information.

WARNING: MODIFICATION OF THIS DEVICE TO RECEIVE CELLULAR RADIOTELEPHONE SERVICE SIGNALS IS PROHIBITED UNDER FCC RULES AND FEDERAL LAW.

Turn off your radio in the following conditions

• Turn off your radio prior to entering any area with a potentially hazardous or explosive atmosphere. Only radio types that are especially qualified should be used in such areas as "Intrinsically Safe". Note: the areas with potentially explosive atmosphere referred to above include blasting caps, blasting areas, inflammable gas, dust particles, metallic powders, grain powders, fueling areas such as below decks on boats, fuel or chemical transfer or storage facilities, areas where the air contains chemicals or particles (such as grain, dust or metal powders) and any other area where you would normally be advised to turn off your vehicle engine. Areas with potentially explosive atmospheres are often – but not always posted.

Use of Communication Devices While Driving

• Always check the laws and regulations on the use of radios in the areas where you drive. Use of Communication Devices, for example, mobile radio, may not be allowed.
• Give full attention to driving and to the road.
• Use hands-free operation, if available.
• Pull off the road and park before making or answering a call, if driving conditions or regulations so require.
• Do not place a portable radio in the area over an air bag or in the airbag deployment area. The radio may be propelled with great force and cause serious injury to occupants of the vehicle when the airbag inflates.

Protect your hearing

• Use the lowest volume necessary to do your job. Turn up the volume only if you are in noisy surroundings.
• Limit the amount of time you use headsets or earpieces at high volume.
• When using the radio without a headset or earpiece, do not place the radio's speaker directly against your ear.
• Use carefully with the earphone maybe possible excessive sound pressure from earphones and headphones can cause hearing loss.

CAUTION: Exposure to loud noises from any source for extended periods of time may temporarily or permanently affect your hearing. The louder the radio's volume, the less time is required before your hearing could be affected.
Hearing damage from loud noise is sometimes undetectable at first and can have a cumulative effect.

Guarantee

Model Number: _____
Serial Number: _____
Purchasing Date: _____
Dealer: _____ Telephone: _____
User's Name: _____ Telephone: _____
Country: _____ Address: _____
Post Code: _____ Email: _____

Remarks:

1.This guarantee card should be kept by the user, no replacement if lost.
2.Most new products carry a two-year manufacturer's warranty from the date of purchase. Further details, pls read http://www.retevis.com/after-sale/
3.The user can get warranty and after-sales service as below:
· Contact the seller where you buy.
· Products Repaired by Our Local Repair Center
4.For warranty service, you will need to provide a receipt proof of purchase from the actual seller for verification

Exclusions from Warranty Coverage:
1.To any product damaged by accident.
2.In the event of misuse or abuse of the product or as a result of unauthorized alterations or repairs.
3.If the serial number has been altered, defaced, or removed.

Shenzhen Retevis Technology Co.,Ltd.
7/F, 13-C, Zhonghaixin Science&Technology Park, No.12 Ganli
6th Road, Jihua Street, Longgang District, Shenzhen, China
Web:www.ailunce.com
E-mail:hams@ailunce.com
Facebook:facebook.com/ailunce

MADE IN CHINA